



EFFECTIVE USE OF CFRP ON DETERIORATED REINFORCED CONCRETE MEMBERS

Case Histories from Texas

Doug Beer, P.E.
TxDOT Bridge Division

Table of contents

Texas Bridge Facts

Bridge Facts

- Texas has 54,180 bridges that carry vehicular traffic--about 26,000 more bridges than any other state in the nation, and more than the combined inventories of 17 states.
- 35,564 Texas bridges are on the state system, and 18,616 bridges are off the state system (city streets, county roads, etc.)
- TxDOT routinely inspects most bridges every two years. This ensures all bridges open to vehicular traffic in Texas are safe.
- Texas has 27 international bridges open to traffic between Mexico and Texas.
- The average age of Texas bridges is 42 years -- 49 years for bridges on the state highway system and 29 years for bridges off the state highway system.
- 88.8 percent of all on-system bridges and 69.3 percent of all off-system bridges are in good or better condition. Overall, 82.1 percent (44,486) of all Texas bridges are in good or better condition.

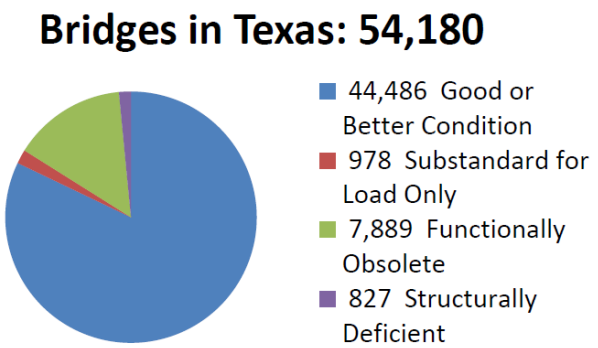

Texas Bridge Facts

Bridge Contracts

- Contracts were awarded to replace, widen, repair or rehabilitate 420 existing bridges. The value of bridge work in these contracts is $382.2 million.
- Contracts were awarded to construct 171 new bridges. The value of bridge work in these contracts is $297 million.

Impact Damage to Concrete Girders

- Most Widespread use of CFRP in Texas – Approximately 100 Repairs Since Early 2000
- Used to Strengthen, Restore Integrity, Confine Patched Beam Repair and add Sacrificial Reinforcing for Future Impacts
- Longitudinal CFRP Plies are Combined with “U” Strips to Enhance Performance.
- CFRP Anchors and Bi-Directional Plies are Added for Increase Shear and Tensile Strength.

Impact Damage to Concrete Girders

Impact Damage to Concrete Girders

Impact Damage to Concrete Girders

Impact Damage to Concrete Girders

Impact Damage to Concrete Girders

Impact Damage to Concrete Girders

Impact Damage to Concrete Girders

Impact Damage to Concrete Girders

Impact Damage to Concrete Girders

Impact Damage to Concrete Girders

Impact Damage to Concrete Girders

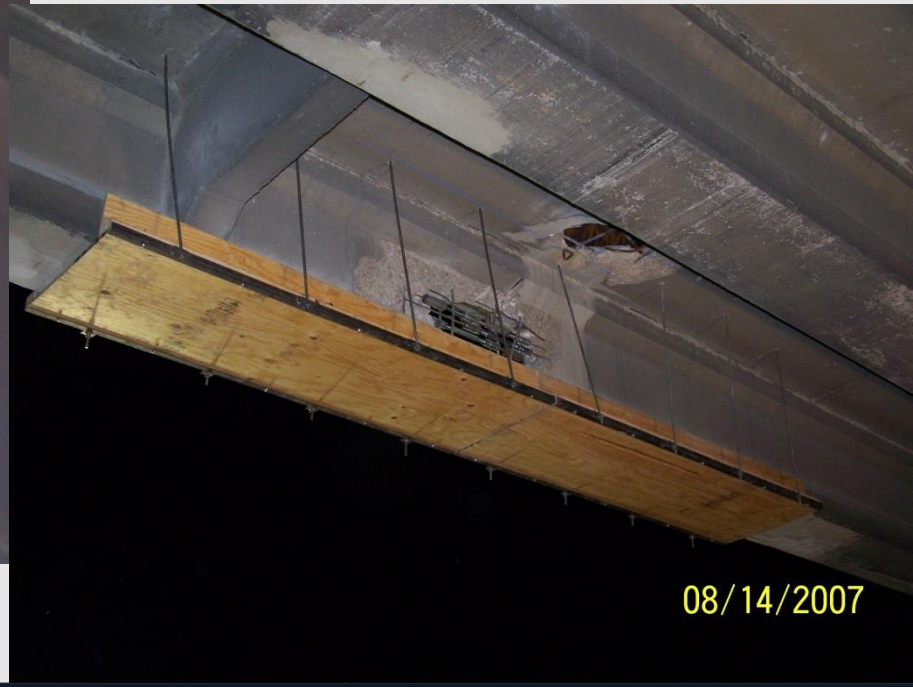

Impact Damage to Concrete Girders

Impact Damage to Concrete Girders

Impact Damage to Concrete Girders

Impact Damage to Concrete Girders

Impact Damage to Concrete Girders

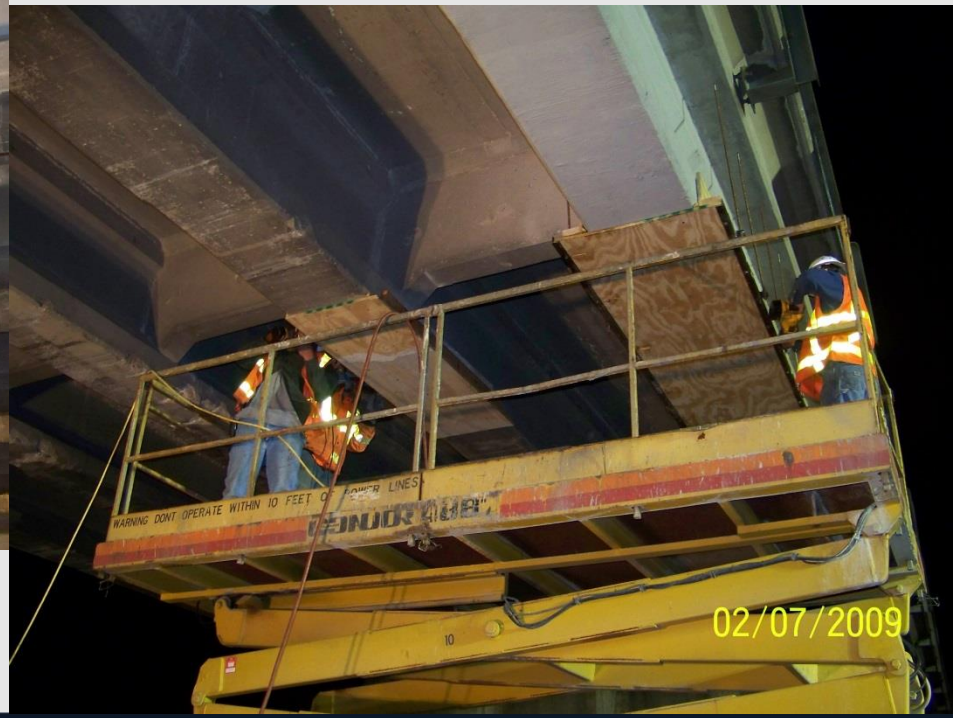

Impact Damage to Concrete Girders

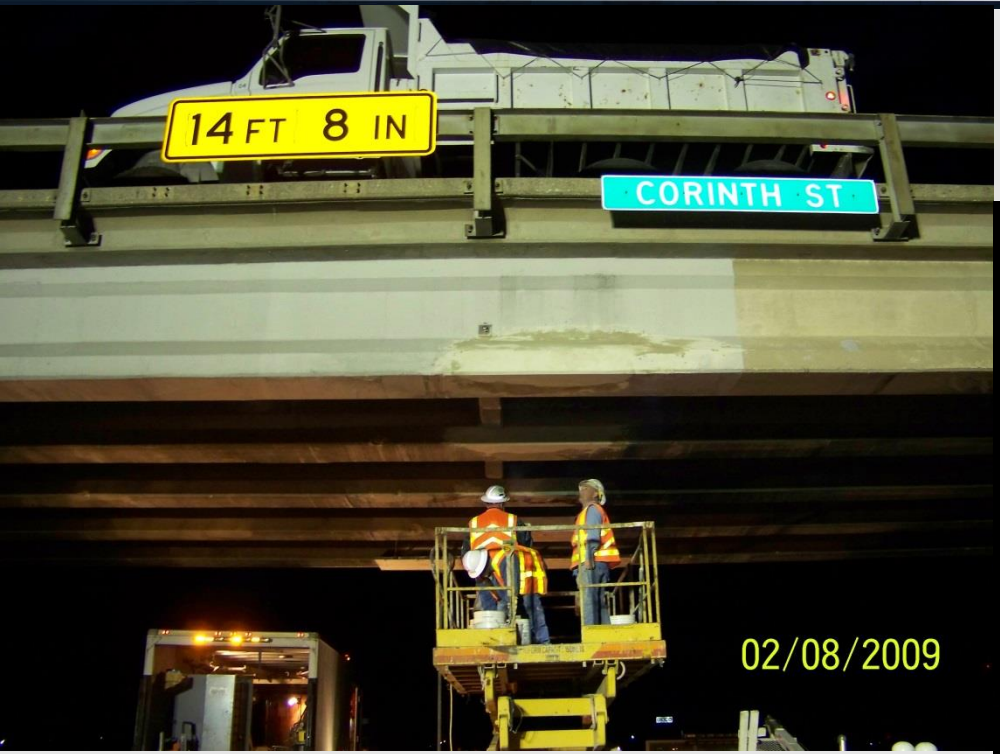

Impact Damage to Concrete Girders

Impact Damage to Concrete Girders

Impact Damage to Concrete Girders

Impact Damage to Concrete Girders

Impact Damage to Concrete Girders

Impact Damage to Concrete Girders

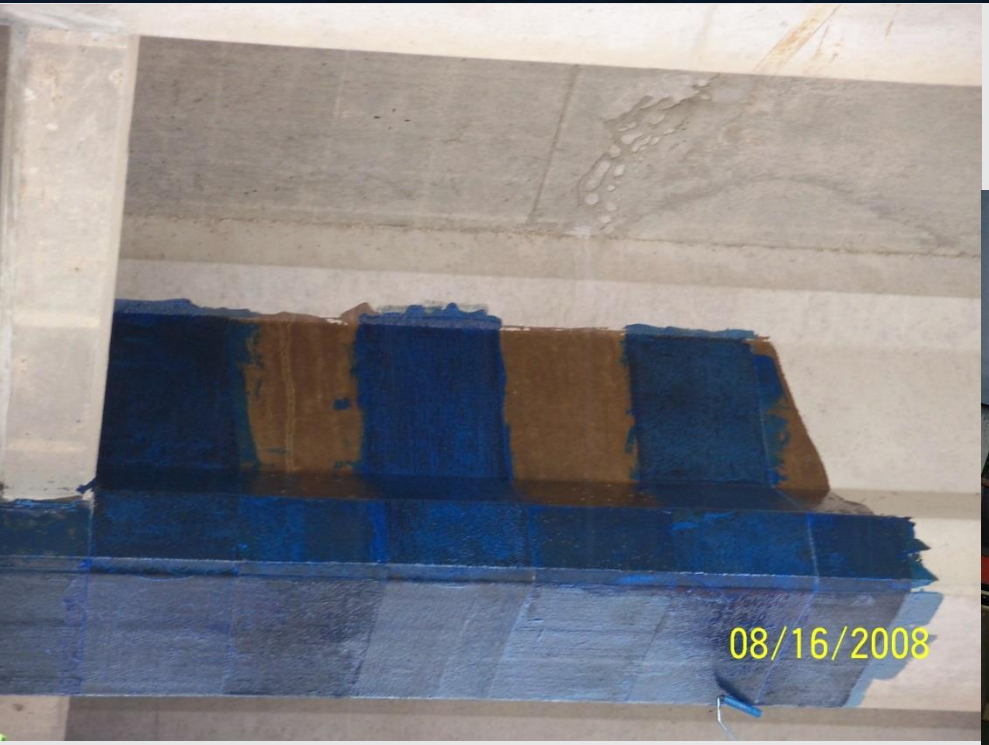

Impact Damage to Concrete Girders

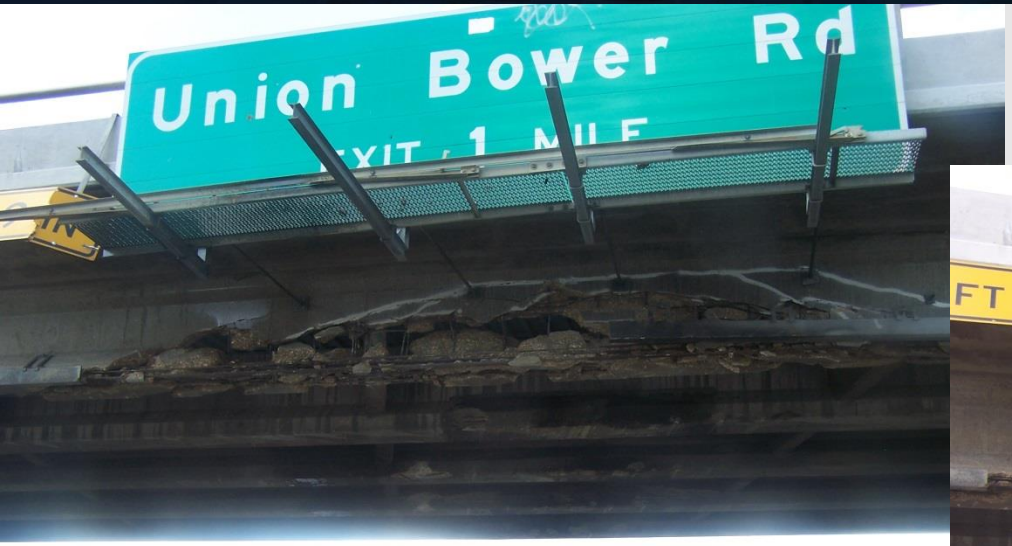

Impact Damage to Concrete Girders

Impact Damage to Concrete Girders

Impact Damage to Concrete Girders

Impact Damage to Concrete Girders

Impact Damage to Concrete Girders

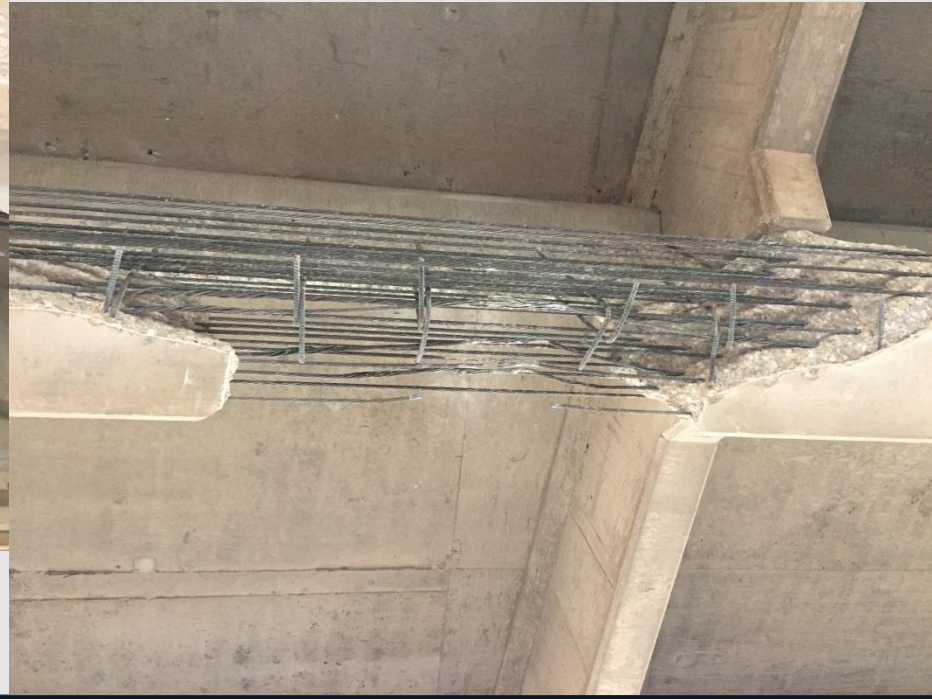

Impact Damage to Concrete Girders

Impact Damage to Concrete Girders

Impact Damage to Concrete Girders

Impact Damage to Concrete Girders

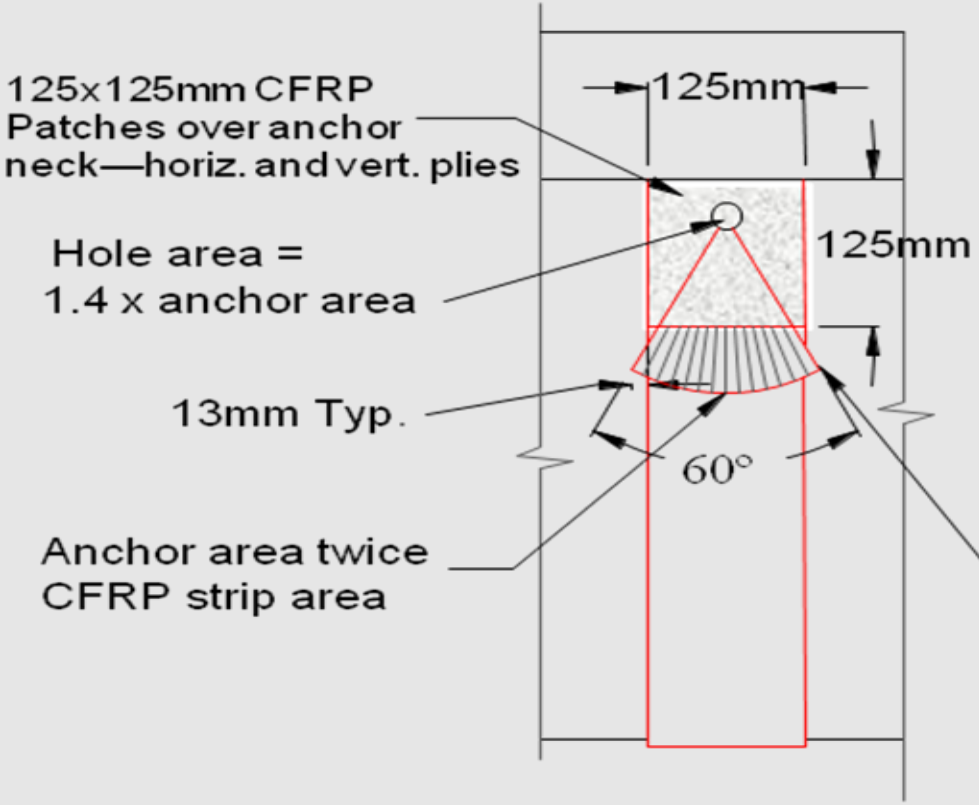

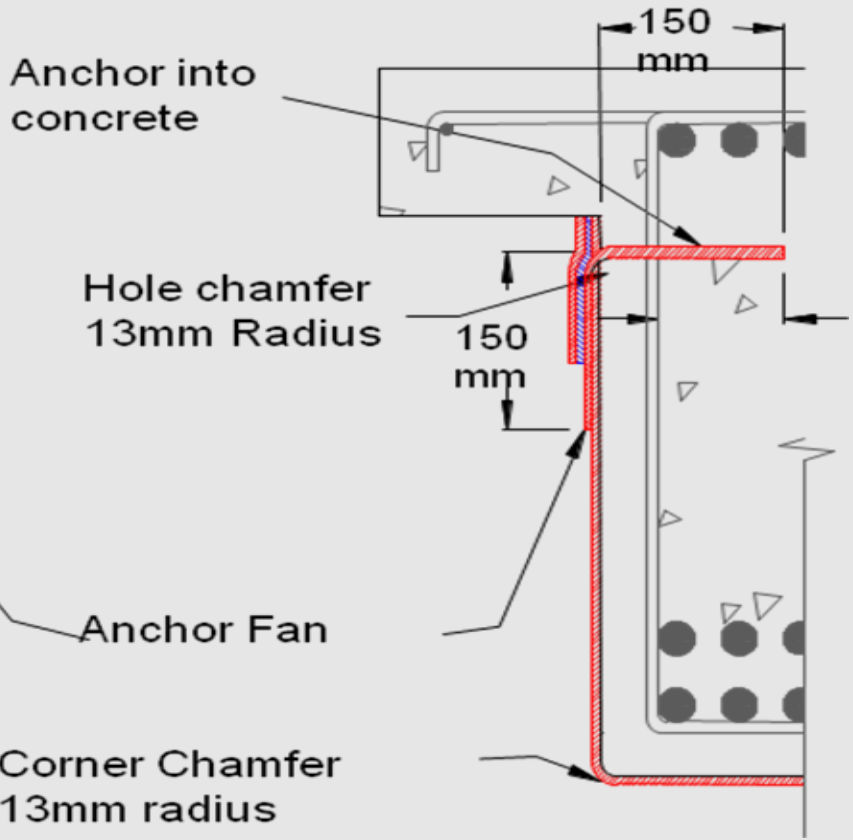

Impact Damage to Concrete Girders

Impact Damage to Concrete Girders

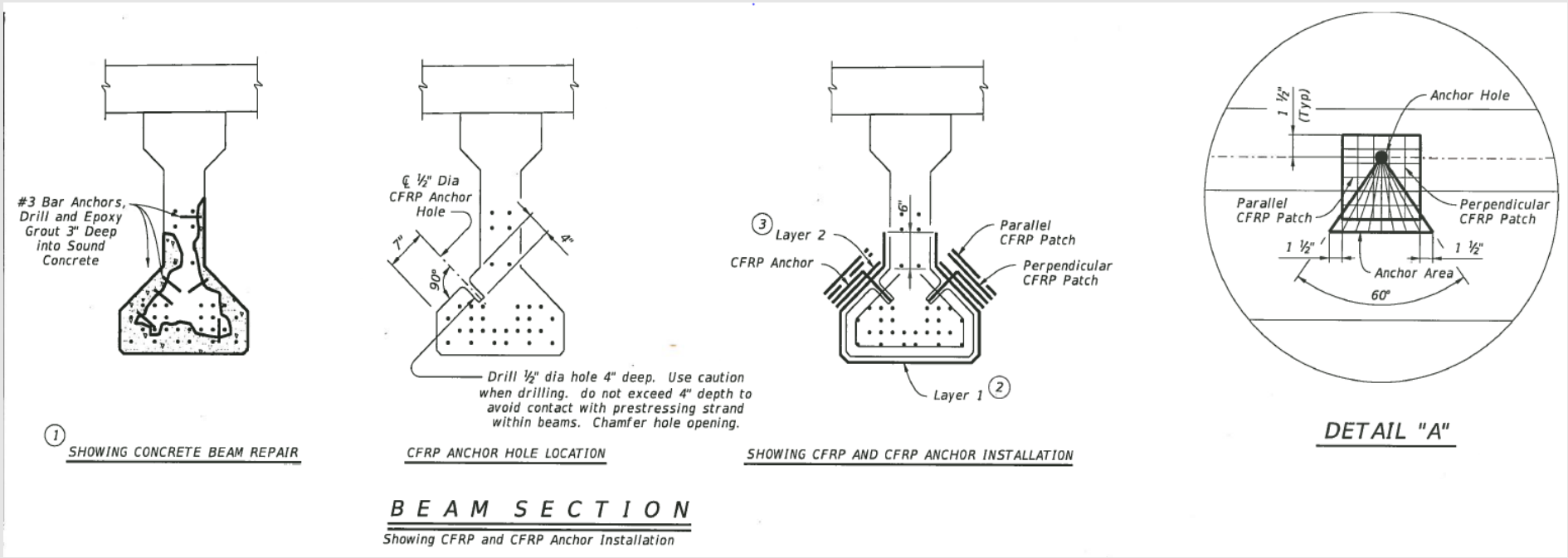

Impact Damage to Concrete Girders

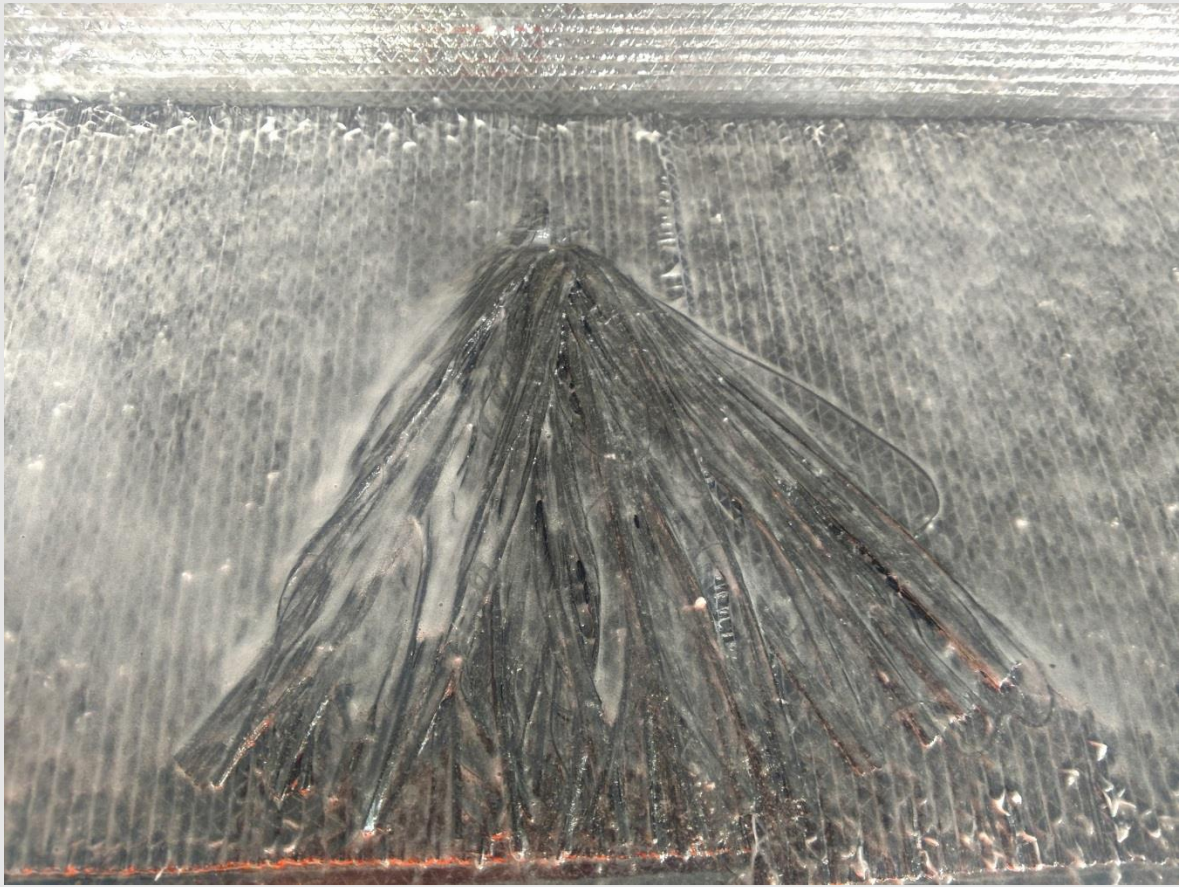

Impact Damage to Concrete Girders

KEY POINTS FOR REPAIRING P/S BEAMS USING WET LAYUP CFRP

- Surface preparation is critical for externally bonded FRP systems. Surface must be clean and smooth, by grinding and abrasive blasting to a surface profile of CSP 2 or 3 (ICRI).
- Application of plenty of epoxy resin for the under/over-coat will serve as the bond and polymer-matrix that is critical for wet layup installation.
- Closing a portion of the bridge to minimize superimposed live-load stress in the beam to make the installed CFRP engage with the live-load is essential for effective structural repair and strengthening.
- The use of pre-load (40 kip truck) is to pre-tension bottom flange of beam where concrete is to be patched, resulting a pre-compression when concrete hardens and load is removed. CFRP installed after superimposed load is removed.

Problems with CFRP used for Impact Damage Girders

- Installation procedures must be followed and inspection is needed to verify surface condition and preparation, application of adequate bonding resins is critical to performance. Some pre-mature failures have been noted due to poor bonding of CFRP to substrate.
- Potential for UV damage. Application of UV topcoat has been utilized and no UV damage has been noted to date.

Repair of Fire Damaged Concrete Bridges

Repair of Fire Damaged Concrete Bridges

Repair of Fire Damaged Concrete Bridges

Repair of Fire Damaged Concrete Bridges

Repair of Fire Damaged Concrete Bridges

Repair of Fire Damaged Concrete Bridges

Repair of Fire Damaged Concrete Bridges

Repair of Fire Damaged Concrete Bridges

Repair of Fire Damaged Concrete Bridges

Repair of Fire Damaged Concrete Bridges

Repair of Fire Damaged Concrete Bridges

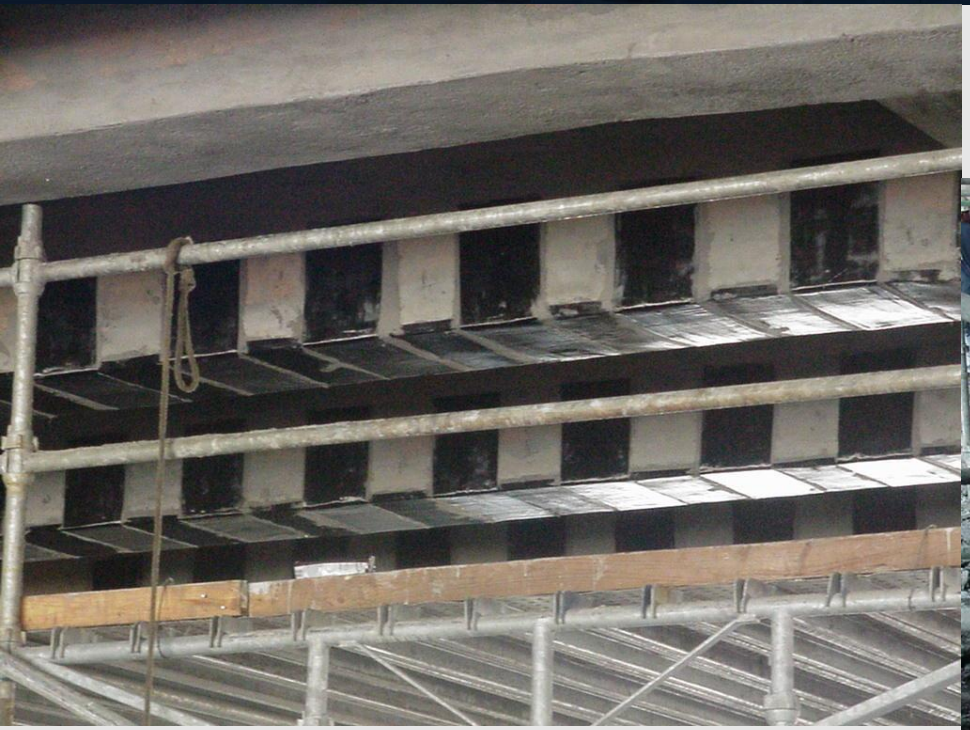

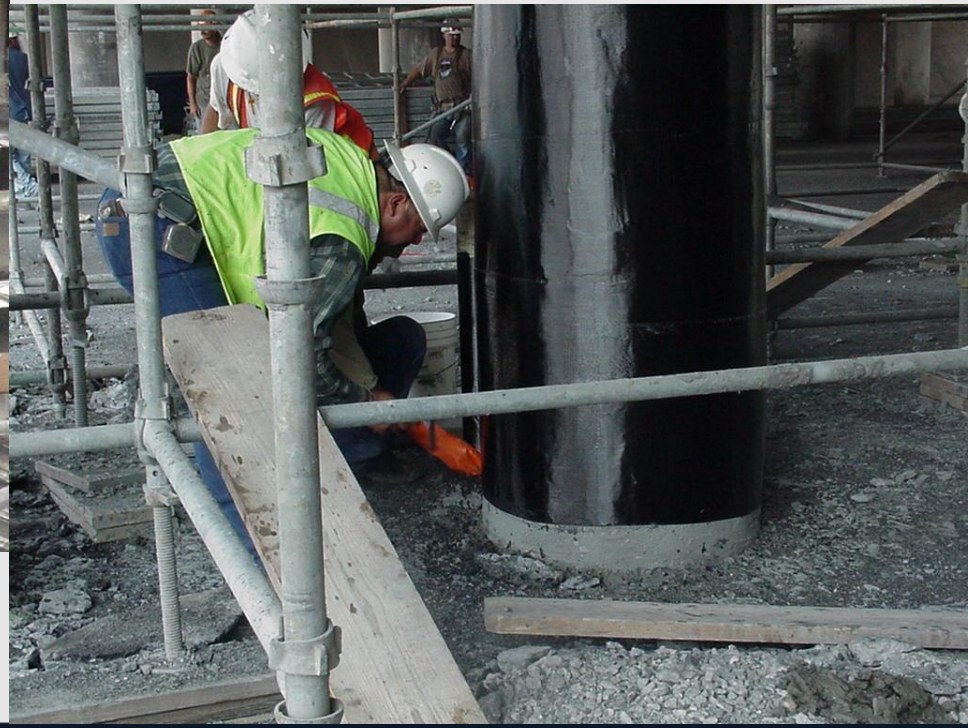

Repair of Fire Damaged Concrete Bridges

Repair of Fire Damaged Concrete Bridges

Repair of Fire Damaged Concrete Bridges

Repair of ASR Damaged Concrete Columns

Repair of ASR Damaged Concrete Columns

Repair of ASR Damaged Concrete Columns

Repair of ASR Damaged Concrete Columns

Repair of ASR Damaged Concrete Columns

Repair of ASR Damaged Concrete Columns

Repair of ASR Damaged Concrete Columns

Repair of ASR Damaged Concrete Columns

Repair of Chloride Induced Corrosion Concrete Members

CTR Technical Report 0-1774-2

- 16 Structures were selected to place FRP-wrapping on columns and caps due to extensive corrosion damage from chloride penetration.
- De-Icing chemicals, salt, and brine have been extensively used in the area resulting to aggressive chloride corrosion.
- Concrete Members exhibited widespread need for concrete repairs, but service life of the repairs was questionable.
- 0-1774-2 Recommendations to extend repair life expectancy:
  1. Remove all unsound concrete and chloride contamination.
  2. Abrasive Blast surfaces, install probes to monitor corrosion activity.
  3. Concrete Patching performed and FRP composite installed.

Repair of Chloride Induced Corrosion Concrete Members

Repair of Chloride Induced Corrosion Concrete Members

Repair of Chloride Induced Corrosion Concrete Members

Repair of Chloride Induced Corrosion Concrete Members

Repair of Chloride Induced Corrosion Concrete Members

Repair of Chloride Induced Corrosion Concrete Members

Repair of Chloride Induced Corrosion Concrete Members

Repair of Chloride Induced Corrosion Concrete Members

Repair of Chloride Induced Corrosion Concrete Members

Repair of Chloride Induced Corrosion Concrete Members

Repair of Chloride Induced Corrosion Concrete Members

Repair of Chloride Induced Corrosion Concrete Members

Repair of Chloride Induced Corrosion Concrete Members

Repair of Chloride Induced Corrosion Concrete Members

Repair of Chloride Induced Corrosion Concrete Members

Repair of Chloride Induced Corrosion Concrete Members

Repair of Chloride Induced Corrosion Concrete Members

Repair of Chloride Induced Corrosion Concrete Members

CTR 0-1774-4

- Follow-up Research to CTR 0-1774-2 revealed chloride penetration had been reduced.
- FRP acted as a barrier to the ingress of chlorides and moisture.
- Some staining and cracking had occurred.
- Probes indicated chloride levels above thresholds for corrosion probability, but no visible evidence of corrosion.

Repair of Chloride Induced Corrosion Concrete Members

Repair of Chloride Induced Corrosion Concrete Members

Repair of Chloride Induced Corrosion Concrete Members

Repair of Chloride Induced Corrosion Concrete Members

Repair of Chloride Induced Corrosion Concrete Members

Repair of Chloride Induced Corrosion Concrete Members

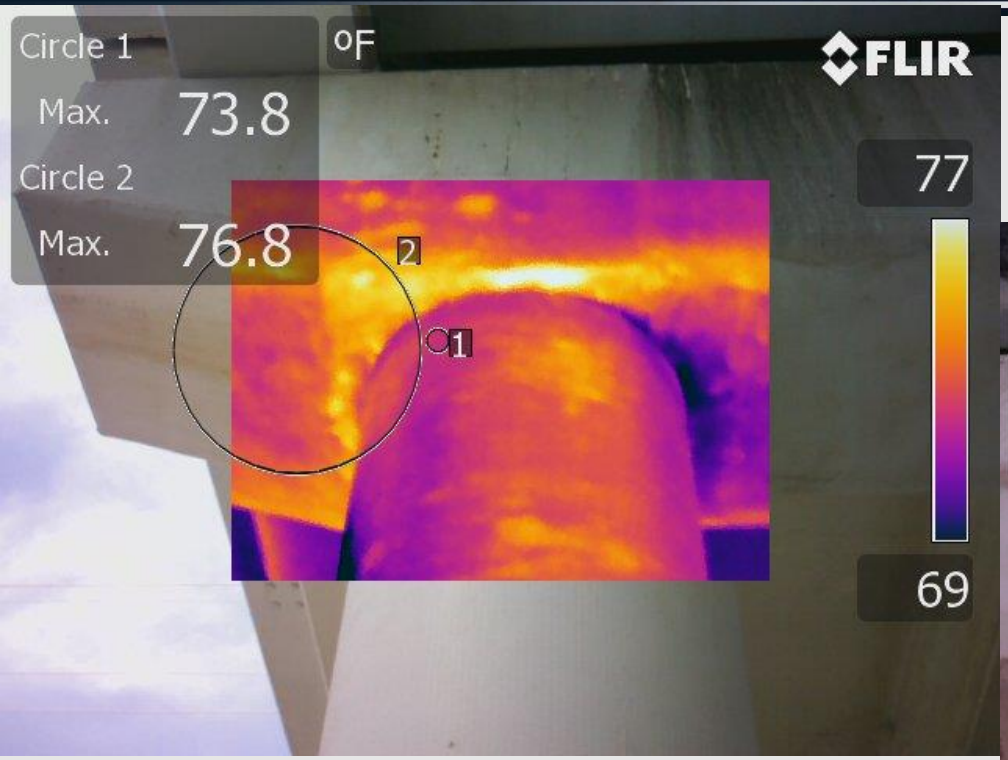

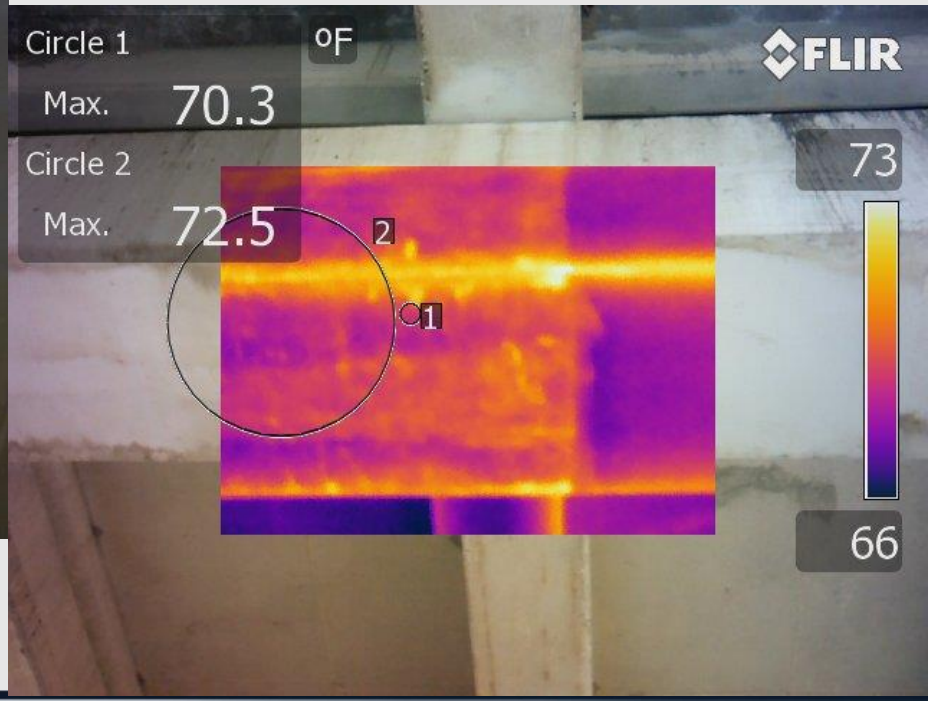

Repair of Chloride Induced Corrosion Concrete Members

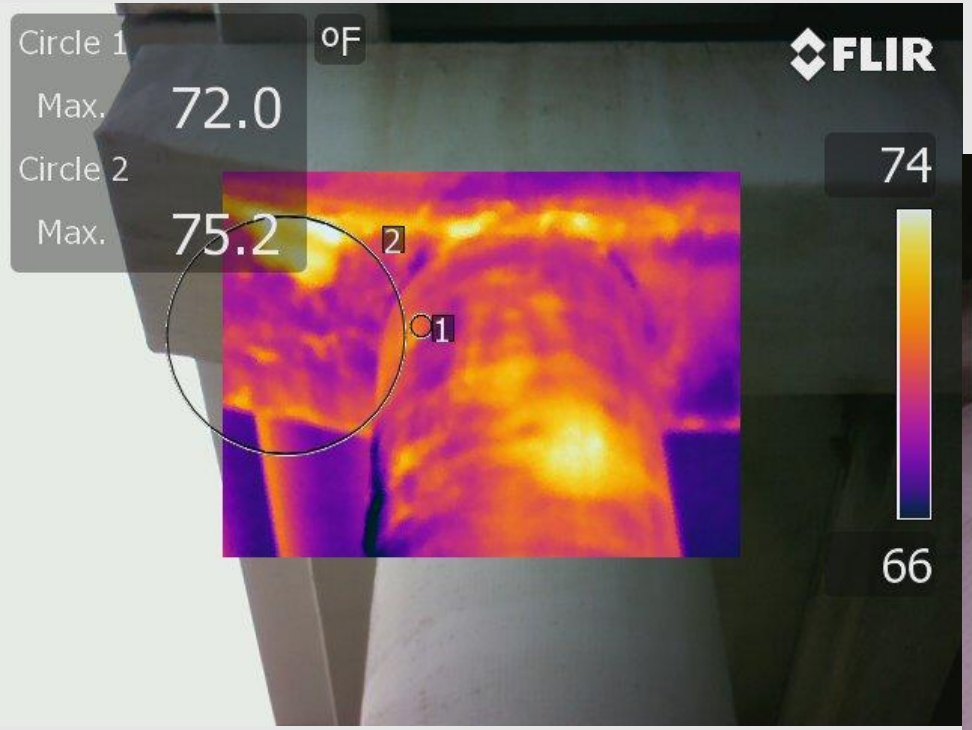

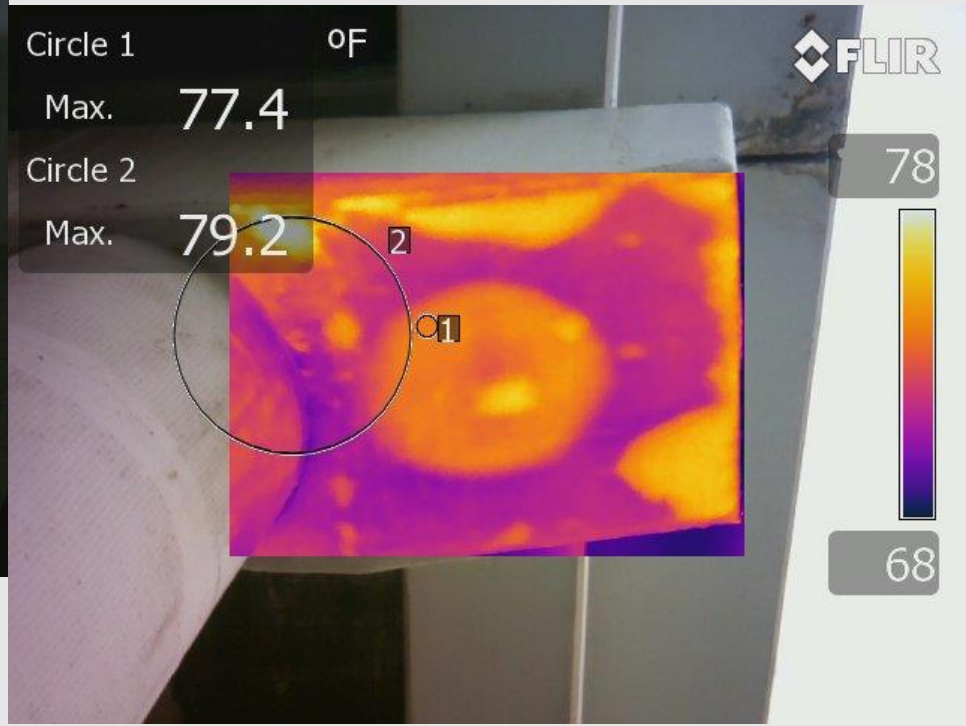

Repair of Chloride Induced Corrosion Concrete Members

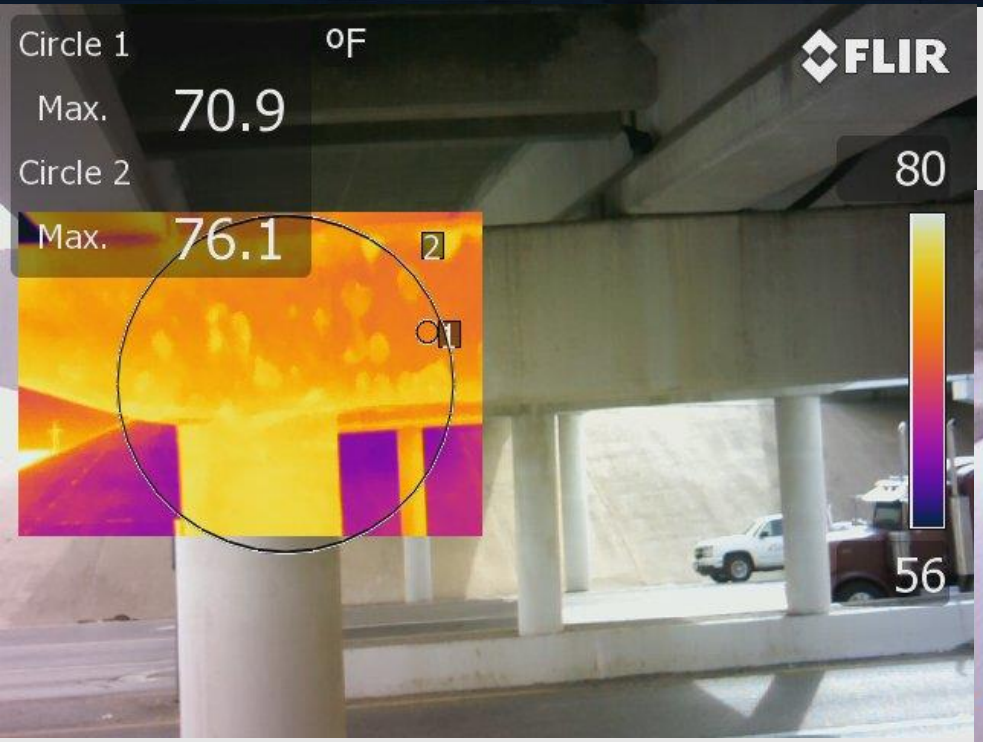

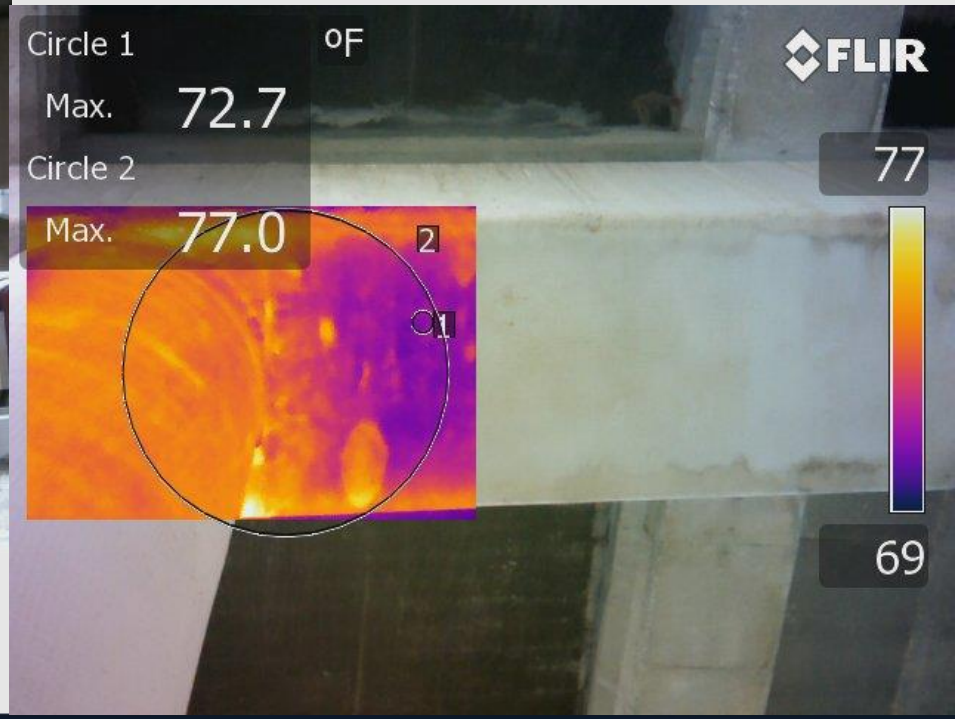

Repair of Chloride Induced Corrosion Concrete Members

Half-Cell Potential Measurements

Field Testing Conducted March 2018

- Readings were taken at 3 different bridge locations
- GFRP and CFRP locations were tested
- Result values were less negative than -200mV
- Per ASTM C876, conclusions are that less than 90% probability no corrosion is occurring at the reinforcing.
- Visual inspection of core locations validated test results.

Repair of Chloride Induced Corrosion Concrete Members

Repair of Chloride Induced Corrosion Concrete Members

Repair of Chloride Induced Corrosion Concrete Members

Repair of Chloride Induced Corrosion Concrete Members

Carbonation Depth Testing

Field Testing Conducted March 2018

- No distinct carbonation depth was noted in the core locations
- Approximately ¾” measured using phenophthalein

Repair of Chloride Induced Corrosion Concrete Members

Repair of Chloride Induced Corrosion Concrete Members

Repair of Corrosion Damaged Concrete Members

Repair of Corrosion Damaged Concrete Members

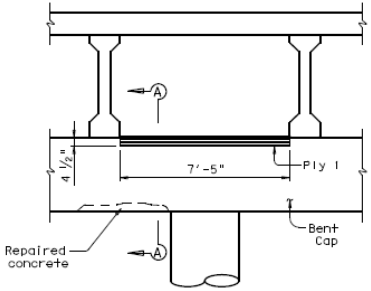

STEP ①

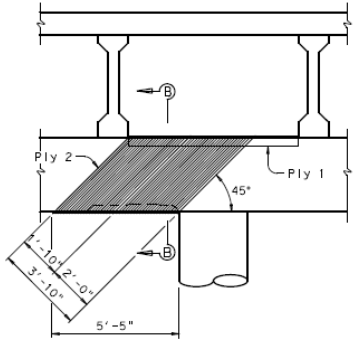

STEP ②

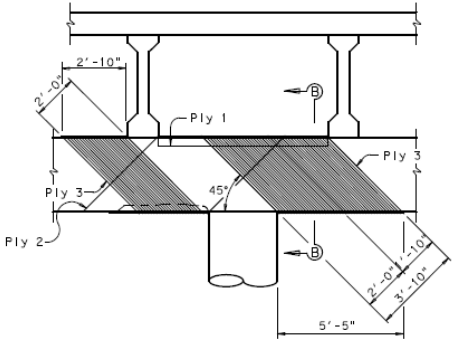

STEP ③

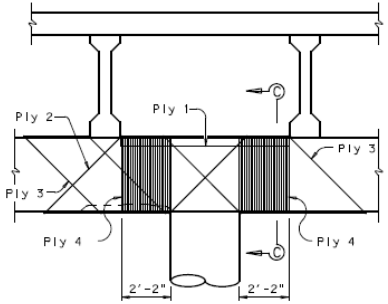

STEP ④

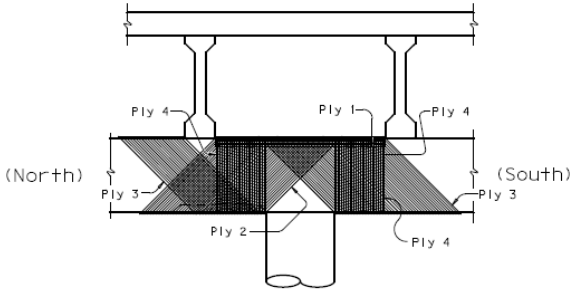

STEP ① THRU ④ IN PLACE

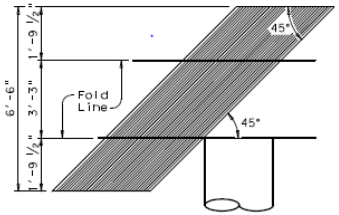

CFRP SHEET FOLD DETAIL

STEPS

① One ply CFRP sheet placed with it's longitudinal direction parallel to the cap edge line

② One ply CFRP sheet (3'-10" wide) placed with it's longitudinal direction angled 45° to the cap edge line (both sides)

③ One ply CFRP sheet (two pieces: 2'-0" and 3'-10" wide) placed the same as in Step 2 with 45° toward opposite direction (both sides)

④ One ply CFRP sheet (two pieces) placed with it's longitudinal direction perpendicular to the cap edge line and completely wrapping the section on both sides of the column

NOTES

1. CFRP sheets used in these strengthening details is Wabo MBrace CF 160 unidirectional high strength carbon fiber fabric per Special Specification Item "CFRP for Concrete Strengthening".

2. See Sheet 1 of 2 for GENERAL NOTES and REPAIR PROCEDURES.

Repair of Corrosion Damaged Concrete Members

Repair of Corrosion Damaged Concrete Members

Repair of Cracking CIP Retaining Wall

Repair of Cracking CIP Retaining Wall

Repair of Cracking CIP Retaining Wall

Repair of Cracking CIP Retaining Wall

Repair of Cracking CIP Retaining Wall

Questions???

Thank You!
Doug Beer, P.E.
TxDOT Bridge Division

doug.beer@txdot.gov

Copyright Notice